Work Order ID 72596

Wednesday, August 03, 2011 1:02:04 PM

ASAP

Item ID: D4003-047

Revision ID:

Item Name: Fuel Pump Inlet Pipe

Accept

Setup Start

Stop

Start Date: 8/3/2011 **Start Qty:** 4.00

Required Date: 8/8/2011 **Req'd Qty:** 4.00

Reference:

Cust Item ID:

Customer:

Approvals: **Process Plan:** // **Date:** 11-08-3 **Tooling:** _____ **Date:** _____

QC: _____ **Date:** _____ **SPC (Y/N):** _____ **Date:** _____

Run Start

Stop

Sequence ID/ Work Center ID	Operation Description	Set Up/ Run Hours	Tool ID	Tool #	Plan Code	Accept Qty	Reject Qty	Reject Number	Insp. Stamp
Draw Nbr	**Revision Nbr**								
D4003	A								
100		0.00							
Small Fab	**Memo**	0.00				BB 11-8-4			
Small Fab	1- Cut tube 12.00" long 2- Bend as per dwg								
110	QC5- Inspect part completeness to step on W/O	0.00							
QC	**Memo**	0.00	S wlosl05			44			
Quality Control									
150	Chemical Conversion Coat per QSI005 4.1	0.00				4	∅	24	w/08/05
HandFinish	**Memo**	0.00							
Hand Finishing									

Dart Aerospace Ltd

W/O:		WORK ORDER CHANGES					
DATE	STEP	PROCEDURE CHANGE	By	Date	Qty	Approval Chief Eng / Prod Mgr	Approval QC Inspector

Part No: _____ **PAR #:** _____ **Fault Category:** _____ **NCR:** Yes No **DQA:** _____ **Date:** _____

Resolution: _____ **Disposition:** _____ **QA: N/C Closed:** _____ **Date:** _____

NCR:		WORK ORDER NON-CONFORMANCE (NCR)						
DATE	STEP	Description of NC Section A	Corrective Action Section B			Verification Section C	Approval Chief Eng	Approval QC Inspector
			Initial Chief Eng	Action Description Chief Eng	Sign & Date			

NOTE: Date & initial all entries

H:\fFORMS\Quality Assurance\approved QA\NCRWO RevE

Work Order ID 72596

Wednesday, August 03, 2011 1:02:04 PM

Item ID: D4003-047 **Accept** **Setup Start**

Revision ID: **Stop**

Item Name: Fuel Pump Inlet Pipe

Start Date: 8/3/2011 **Start Qty:** 4.00 **Cust Item ID:**

Required Date: 8/8/2011 **Req'd Qty:** 4.00 **Customer:**

Reference:

Run Start

Approvals: **Process Plan:** _____ **Date:** _____ **Tooling:** _____ **Date:** _____

Stop

QC: _____ **Date:** _____ **SPC (Y/N):** _____ **Date:** _____

Sequence ID/ Work Center ID	Operation Description	Set Up/ Run Hours	Tool ID	Tool #	Plan Code	Accept Qty	Reject Qty	Reject Number	Insp. Stamp
161		0.00							
Small Fab	**Memo**	0.00				B11-8-8		4	
Small Fab	1- intall sleeve and nut 2-flare ends as per dwg								
162	QC5- Inspect part completeness to step on W/O	0.00							
QC	**Memo**	0.00	5 wl08/06			-4			
Quality Control									
170	Identify as per dwg & Stock Location: 193	0.00				11/8/8			
Packaging	**Memo**	0.00							
Packaging									

Dart Aerospace Ltd

W/O:		WORK ORDER CHANGES					
DATE	STEP	PROCEDURE CHANGE	By	Date	Qty	Approval Chief Eng / Prod Mgr	Approval QC Inspector

Part No: _____ **PAR #:** _____ **Fault Category:** _____ **NCR:** Yes No **DQA:** _____ **Date:** _____

Resolution: _____ **Disposition:** _____ **QA: N/C Closed:** _____ **Date:** _____

NCR:		WORK ORDER NON-CONFORMANCE (NCR)						
DATE	STEP	Description of NC Section A	Corrective Action Section B			Verification Section C	Approval Chief Eng	Approval QC Inspector
			Initial Chief Eng	Action Description Chief Eng	Sign & Date			

NOTE: Date & initial all entries

H:\fFORMS\Quality Assurance\approved QA\NCRWO RevE

H:\fFORMS\Quality Assurance\approved QA\NCRWO RevE

Picklist Print

Wednesday, August 03, 2011 1:02:14 PM

Work Order ID: 72596

Parent Item: D4003-047

Parent Item Name: Fuel Pump Inlet Pipe

Start Date: 8/3/2011 **Required Date:** 8/8/2011

Start Qty: 4.00 **Required Qty:** 4.00

Comments: IPP rev A 10.01.12 new issue prelim EC verified by:DD IPP Rev B 10.05.13 ecn 10-562 EC verified by:DD

Component Item ID/ Item Name	Replacement Item ID	Mfg/ Purch	Bin Item	Primary Location	Last Location	Route Seq ID	Unit of Measure	Qty on Hand	Qty per Kit	Total Qty	Qty Issued	Date Issued	Status
M6061T6T0.375W.035		Purchased	No			100	f	224.5100	0.98	3.92			
6061-T6 RD Tube .375 x.035W										SD 11/08/04			
				Location			**Loc Qty**		**Loc Code**				
				MAT014			224.51						
					104913		31.75						
					112652		192.76			4			
AN818-6D		Purchased	No			161	Each	24.0000	2	8			
Nut										SD 11/08/08			
				Location			**Loc Qty**		**Loc Code**				
				ST331			24						
					114988		24			8			
MS20819-6D		Purchased	No			161	Each	32.0000	2	8			
Sleeve										11/08/08			
				Location			**Loc Qty**		**Loc Code**				
				ST323			32						
					114884		7			7			
					116289		25			1			

Dart Aerospace Ltd

W/O:		WORK ORDER CHANGES					
DATE	STEP	PROCEDURE CHANGE	By	Date	Qty	Approval Chief Eng / Prod Mgr	Approval QC Inspector

Part No: _____ **PAR #:** _____ **Fault Category:** _____ **NCR:** Yes No **DQA:** _____ **Date:** _____

Resolution: _____ **Disposition:** _____ **QA: N/C Closed:** _____ **Date:** _____

NCR:		WORK ORDER NON-CONFORMANCE (NCR)						
DATE	STEP	Description of NC Section A	Corrective Action Section B			Verification Section C	Approval Chief Eng	Approval QC Inspector
			Initial Chief Eng	Action Description Chief Eng	Sign & Date			

NOTE: Date & initial all entries

H:\fFORMS\Quality Assurance\approved QA\NCRWO RevE

ITEM NO.	QTY. -047	PART NUMBER	DESCRIPTION	JOHN CAMERON AVIATION PART NUMBER
1	X	D4003-047	FUEL PUMP INLET PIPE	JCA-M47-2-16
2	1	D4003-7	FUEL INLET PIPE	
3	2	AN818-6D	NUT	
4	2	MS20819-6D	SLEEVE	

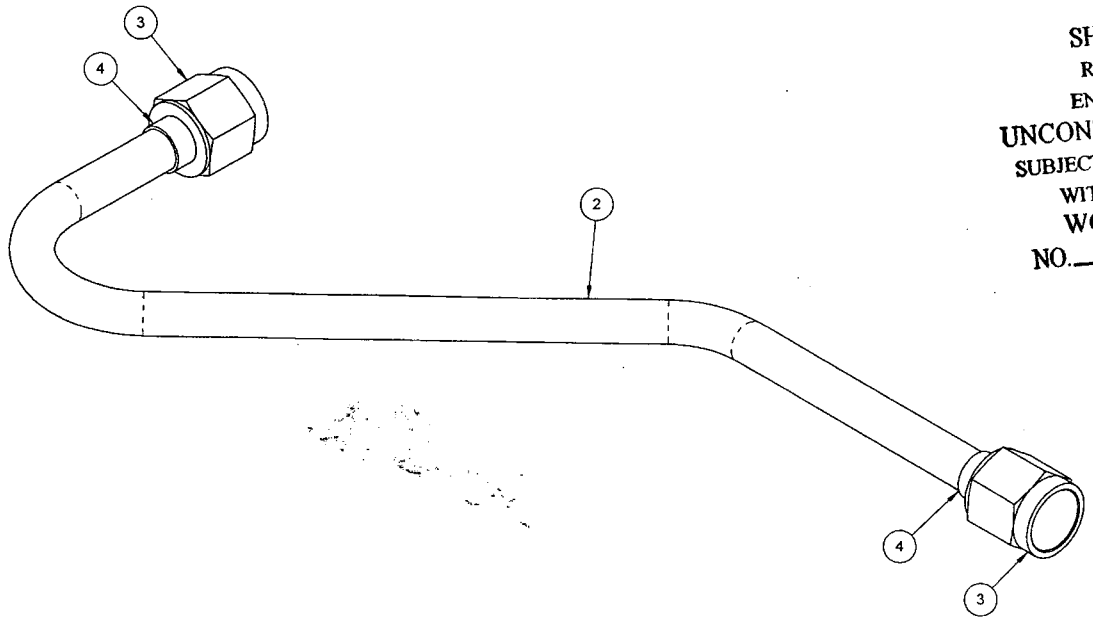

SHOP COPY
RETURN TO
ENGINEERING
UNCONTROLLED COPY
SUBJECT TO AMENDMENT
WITHOUT NOTICE
WORK ORDER
NO. 72394
11-08-3

RELEASED
2010 -05- 05

D4003-047 FUEL PUMP INLET PIPE

NOTES:
1) MATERIAL: N/A
2) FINISH: N/A
3) TOLERANCES: PER DART QSI 018 UNLESS OTHERWISE NOTED
4) UNITS: INCHES UNLESS OTHERWISE NOTED
5) BREAK SHARP EDGES: 0.005 TO 0.010 MAX
6) IDENTIFICATION: IDENTIFY WITH DART P/N "D4003-047" AND B/N USING FINE POINT PERMANENT INK MARKER
7) WEIGHT: 0.07 lbs

REV.	DESCRIPTION	BY	DATE
A	NEW ISSUE		10.02.05

DESIGN	
DRAWN	
CHECKED	
MFG. APPR.	
APPROVED	
DE APPR.	
DATE	10.02.05

DART AEROSPACE LTD
HAWKESBURY, ONTARIO, CANADA

DRAWING NO. D4003 — REV. A — SHEET 1 OF 9
TITLE: LINE — SCALE: NTS

COPYRIGHT © 2010 BY DART AEROSPACE LTD
THIS DOCUMENT IS PRIVATE AND CONFIDENTIAL AND IS SUPPLIED ON THE EXPRESS CONDITION THAT IT IS NOT TO BE USED FOR ANY PURPOSE OR COPIED OR COMMUNICATED TO ANY OTHER PERSON WITHOUT WRITTEN PERMISSION FROM DART AEROSPACE LTD

Dart Aerospace Ltd

W/O:		WORK ORDER CHANGES					
DATE	STEP	PROCEDURE CHANGE	By	Date	Qty	Approval Chief Eng / Prod Mgr	Approval QC Inspector

O: _____ PAR #: _____ Fault Category: _____ _____ NCR: Yes No DQA: _____ Date: _____

Resolution: _____ Disposition: _____ _____ QA: N/C Closed: _____ Date: _____

NCR:		WORK ORDER NON-CON RMANCE (NCR)						
DATE	STEP	Description of NC Section A	Corrective Ac Section B			Verification Section C	Approval Chief Eng	Approval QC Inspector
			Initial Chief Eng	Act ption ng	Sign & Date			

NOTE: Date & initial all entries

H:\fFORMS\Quality Assurance\approved QA\NCRWO RevE

DART AEROSPACE PART NUMBER	JOHN CAMERON AVIATION PART NUMBER
D4003-7	REF JCA-M47-2-16

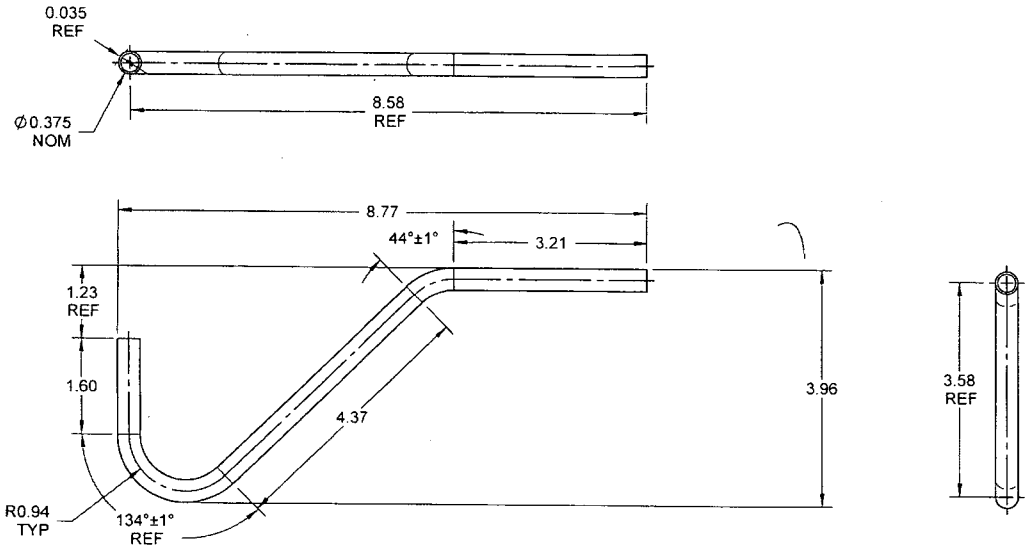

12894

D4003-7 FUEL INLET PIPE

RELEASED
2010 -05- 05

NOTES:
1) MATERIAL: 6061-T6 OR 6061-T62 ALUMINUM TUBING, Ø0.375 X 0.035 WALL THICKNESS PER WW-T-700/6 OR AMS 4080 OR AMS 4082 OR QQ-A-200/8 OR QQ-A-225/8 REF DART SPEC M6061T6T0.375W.035
2) FINISH: CHEMICAL CONVERSION COAT PER DART QSI 005 4.1
3) TOLERANCES: PER DART QSI 018 UNLESS OTHERWISE NOTED
4) UNITS: INCHES UNLESS OTHERWISE NOTED
5) BREAK SHARP EDGES: 0.005 TO 0.010 MAX
6) IDENTIFICATION: N/A
7) WEIGHT: 0.04 lbs

DESIGN		DART AEROSPACE LTD HAWKESBURY, ONTARIO, CANADA
DRAWN		
CHECKED		DRAWING NO. D4003 — REV. A — SHEET 6 OF 9
MFG. APPR.		
APPROVED		TITLE LINE — SCALE NTS
DE APPR.		
DATE	10.02.05	

COPYRIGHT © 2010 BY DART AEROSPACE LTD
THIS DOCUMENT IS PRIVATE AND CONFIDENTIAL AND IS SUPPLIED ON THE EXPRESS CONDITION THAT IT IS NOT TO BE USED FOR ANY PURPOSE OR COPIED OR COMMUNICATED TO ANY OTHER PERSON WITHOUT WRITTEN PERMISSION FROM DART AEROSPACE LTD

Dart Aerospace Ltd

W/O:		WORK ORDER CHANGES					
DATE	STEP	PROCEDURE CHANGE	By	Date	Qty	Approval Chief Eng / Prod Mgr	Approval QC Inspector

Part No: _____ **PAR #:** _____ **Fault Category:** _____ **NCR:** Yes No **DQA:** _____ **Date:** _____

Resolution: _____ **Disposition:** _____ **QA: N/C Closed:** _____ **Date:** _____

NCR:		WORK ORDER NON-CONFORMANCE (NCR)						
DATE	STEP	Description of NC Section A	Corrective Action Section B			Verification Section C	Approval Chief Eng	Approval QC Inspector
			Initial Chief Eng	Action Description Chief Eng	Sign & Date			

NOTE: Date & initial all entries